由 Autodesk 教育版产品制作

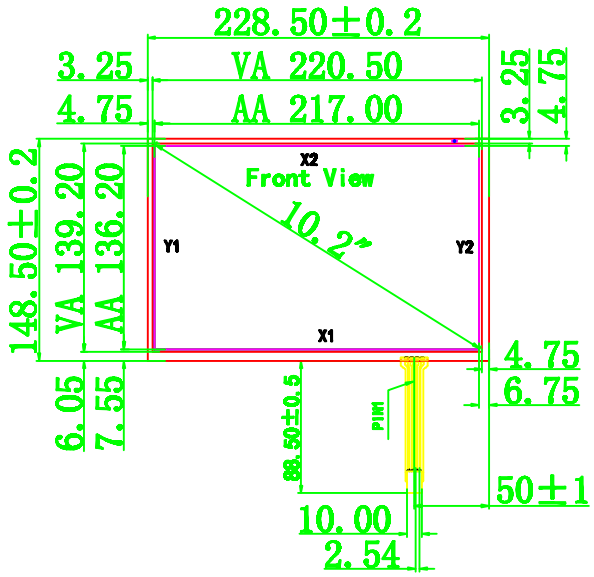

PIN	Assignment
1	Y1
2	X1
3	Y2
4	X2

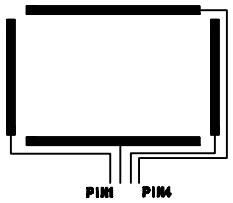

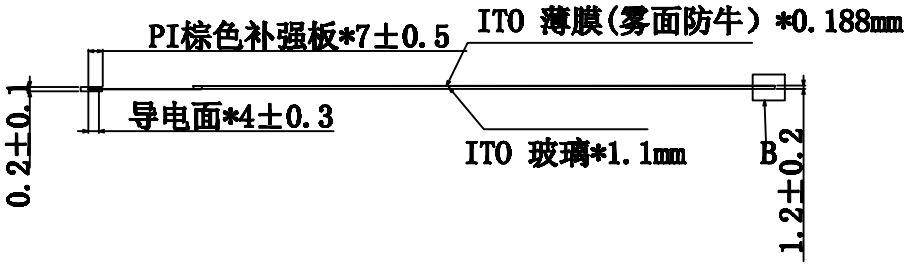

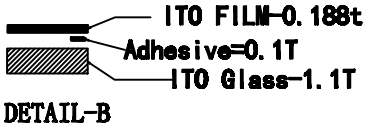

Instruction:
1. Type:Film to Glass
2. Operating Voltage: 3~7 V
3. Response Time:≤10ms
4. Storage Temperature: -20 ℃~+70 ℃
5. Operation Temperature/Humidity : -10 ℃~+60 ℃/ 20%~95%
6. Hitting Life:>10,000,000 Times ,250gf Force;
7. writting Life>1,000,000 Times 250gf Force;
8. Connect Material:FPC+PIN
9. Film Thickness:0.188mm
10. Glass Thickness:1.1mm
11. Light transmission: ≥78%
12. Force:100g or less
13. Linearity:≤1.5%
14. Insulation:≥20M Ω
15. Surface Hardness ≥3H(pencil)
16. Resistance:Y:400Ω-1000Ω X:200Ω-600Ω
17. 未标注公差为±0.2mm

MODEL NO.	TS102A4K02	UNIT:	MM
DRAWN:		TOLERANCE:	±0.3
DATE:	15/12/25	SCALE:	1:1
VERSION:	1.0	REV:	

由 Autodesk 教育版产品制作